Purchased by the U. S. Department of Agriculture
For Official Use

All-Electronic Counter/Timer for Current Meters

H. D. Fisher, J. A. Bondurant
MEMBER
ASAE

CUP and propeller type current meters originally required an operator to count contact closure noise using earphones. Commercial counters then became available using an electromechanical readout. These counters have problems because either the points in the current meter head carry the current to drive the counter which results in contact burning, or there is an intermediate relay between the points and the counter which introduces another source of possible mechanical failure. The timebase on these units is usually a stopwatch which must be controlled by the operator and has no direct electrical control upon the operation of the counter. The watches are delicate mechanical devices subject to wear and breakage.

Some improvement in these units resulted from using a transistor driver for the electromechanical counter and a solid-state time delay device to generate a fixed timing interval (Fisher and Bondurant 1970). The main problem in these units is still the impulse counter which requires a high current and is inherently subject to mechanical wear and failure because of dust or water.

The counter/timer described in his paper eliminates these problems by use of an all-electronic counting and readout system which features an LED (light emitting diode) readout, low power dissipation, flexibility of control, and a dual range timebase. The result is a compact (14 x 10 x 8 cm), lightweight (600 g with batteries) unit which is unaffected by most environmental effects except severe mechanical damage or complete immersion in water. The parts cost is approximately $80.00 per unit.

The timebase for the new counter/timer shown in Fig. 1 is a Mostek* MK5009P MOS LSI (metal oxide semiconductor, large scale integration) circuit with an external RC circuit driven by internal components at a frequency of 200 Hz. This frequency is divided by internal counters of the circuit which are switch-programmed to give an output pulse every 50 or 100 sec. The oscillator runs continuously, and all external controls operate only upon the divider chain within the circuit. The timebase oscillator can be adjusted with the trimmer potentiometer to ± 1 Hz.

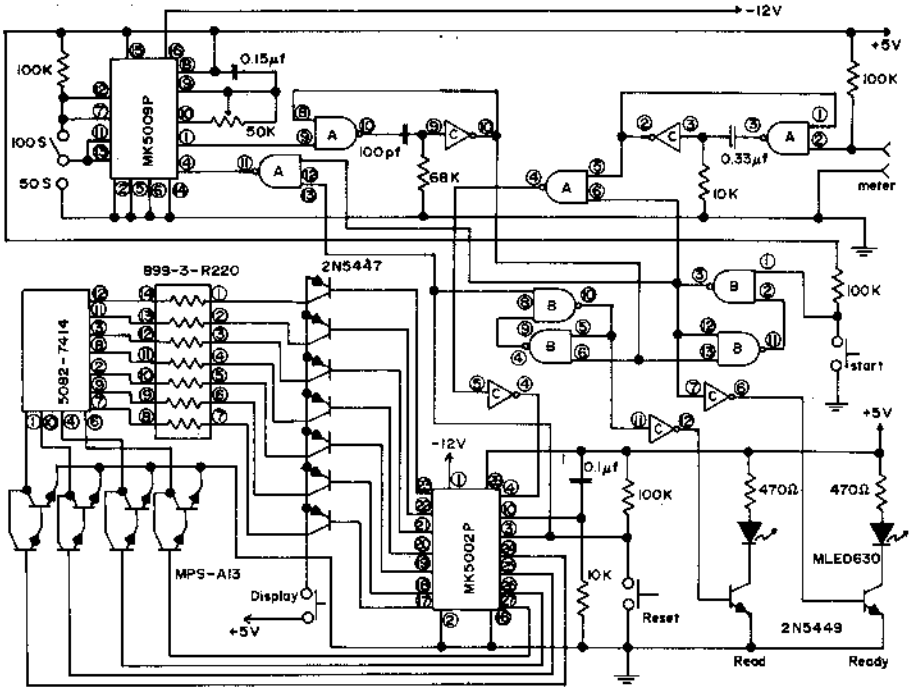

FIG. 1 Schematic of electronic water velocity counter/timer.

The contacts in the meter head are buffered by a monostable circuit consisting of 2 CMOS (complimentary metal oxide semiconductor) gates. Whether or not the conditioned pulse reaches the counting circuitry depends upon a signal gate and a memory consisting of 2 cross-coupled gates. When this memory has been set by the operation of the "start" switch, pulses pass through the signal gate to the counting circuit. The timebase actuates another monostable circuit which resets the control memory and sets a second memory. This activates one of the status indicators. No more pulses can reach the counting circuitry until the "start" switch is operated again. A manual reset is provided, which overrides all other control functions to reset the counters, the timebase, and the memory units.

A Mostek MK5002P MOS LSI circuit accumulates pulses produced by the meter. This circuit contains all the counters and gating necessary for accumulation, BCD to 7 segment decoding, and digit and segment driving for operating a display in the multiplexed mode. All that is necessary is to add 2 external components to set the multiplexing frequency and interface the circuit to a display (ref. 2). This interface is accomplished with discrete transistors and Darlingtons and resistors in a DIP (dual inline package).

Three mercury batteries supply power for the circuit. One supplies +5 VCD to the logic and counters, another +5 VDC to the display where almost all

Article was submitted for publication in October 1973; reviewed and approved for publication by the Soil and Water Division of ASAE in February 1974.

Contribution from the Western Region, Agricultural Research Service, USDA; Idaho Agricultural Experiment Station cooperating.

The authors are: H. D. FISHER, Electronics Engineer, and J. A. BONDURANT, Agricultural Engineer, Snake River Conservation Research Center, Kimberly, Idaho.

*Trade names and company names are included for the benefit of the reader and do not imply any endorsement or preferential treatment of the product listed by the U.S. Department of Agriculture.

This article is reprinted from the TRANSACTIONS of the ASAE (Vol. 17, No. 3, pp. 412, 413, 1974)
Published by the American Society of Agricultural Engineers, St. Joseph, Michigan

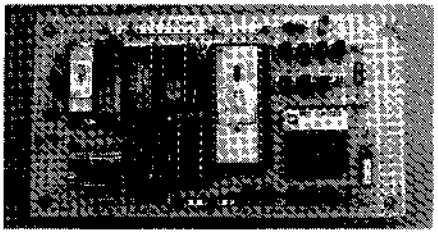

FIG. 2 Circuit board layout for counter/timer.

the power dissipation occurs, and the third battery supplies −12 VDC for biasing the counter and timebase circuits. A separate switch controls power to the display so that the display dissipates power only when being read.

While the circuit contains a relatively large number of interconnections, it can be wired by anyone familiar with good solder technique since all integrated circuits are mounted in sockets and most connections are socket-to-socket. Fig. 2 shows the circuit board layout the authors used. Wiring in this case was done with an A-MP Termipoint point-to-point wiring tool.

If modifications of this circuit are made, it is important to force the inputs of all unused gates to either logic 1 or logic 0 (+5 V or 0 V). This insures that accumulated static charge on the high-impedance inputs does not force the output to a state where both complementary MOS transistors are on, resulting in almost a short circuit across the power supply.

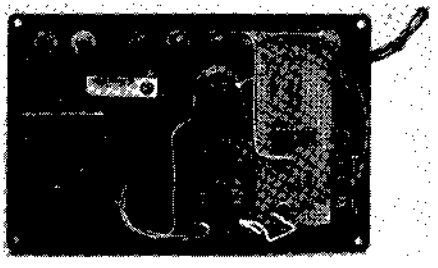

FIG. 4 Modification installed in Neyrpic counter/timer.

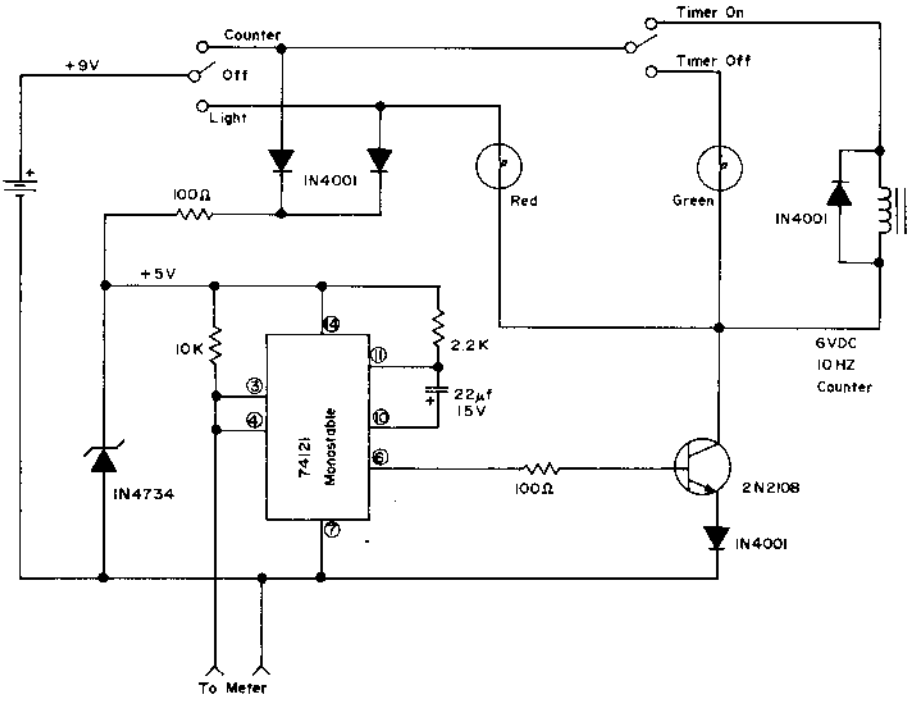

FIG. 3 Modification of Neyrpic counter/timer.

Fig. 3 shows a method of modifying a commercial current meter counter to decrease the power dissipation, eliminate mechanical relay interfaces, and thereby increase the reliability of the unit. This circuit directly replaces the original circuit in the counters and is operated by the same controls. An internal 9 VDC battery or external battery pack is used to power the circuit. Externally, the counter/timer appears the same, only the internal operation of the unit is altered by this modification (Fig. 4).

All the circuits shown are immediately compatible with the newer current meters which have a reed switch contact closure output, such as the Neyrpic and Ott types. Older meters, such as the Hoff and Price, may require the replacement of the standard "cam and whisker" contact arrangement with a magnetically operated reed switch.

References

1 Fisher, H. D., and J. A. Bondurant. 1970. An inexpensive countertimer for water velocity meters. Agricultural Engineering 51(10):600-601, Oct.

2 Mostek Corporation. 1972. Operation of the MK5002P MOS 4-digit counter/decoder. Operation Note. Carrollton, Texas.

LIST OF MAJOR COMPONENTS

Mostek MK5002P Counter/Display Decoder

Mostek MK5009P Counter/Timebase

Motorola MC14011CP or RCA CD4011AE Quad 2-in NAND

RCA CD4049AE Hex Inverter

Hewlett-Packard 5082-7414 LED Readout

Beckman 899-3-R220 Resistor Array

Motorola MPS-A13 Darlington

Motorola MLED650 LED Panel Lights