Reprinted from the *Journal of Environmental Quality*
Vol. 7, no. 4, October–December 1978. Copyright © 1978, ASA, CSSA, SSSA
677 South Segoe Rd., Madison, WI 53711 USA

Redox Potentials in a Cropped Potato Processing Waste Water Disposal Field with a Deep Water Table[1]

J. H. SMITH, R. G. GILBERT, AND J. B. MILLER[2]

ABSTRACT

Redox potential measurements were made in a field irrigated with potato processing waste water at seven depths of 5 to 150 cm for 14 mo. Irrigation with canal water mixed with waste water in the summer, and with waste water in the winter, decreased redox potentials in the field at some depths for a short time but not enough to cause denitrification. However, as the soil temperature increased in the spring, and decomposition of the accumulated waste organic matter accelerated, redox potentials decreased after each irrigation at all observed depths. During April, redox potentials low enough to promote denitrification (below +225 mV) at 90-, 120-, and 150-cm depths in the soil persisted for 2 weeks. Irrigation with nondiluted waste water in June and July decreased redox potentials and denitrification occurred for up to 3 days after irrigations. As the soil temperature increased in the spring, nitrification of accumulated organic matter increased soil nitrates. Waste water irrigations from April to July promoted denitrification, removing most of the nitrate from the soil, and thereby decreasing the potential for ground water pollution.

Additional Index Words: **denitrification, flood irrigation, nitrogen, nitrate, ground water pollution.**

Smith et al. (7) measured redox potentials (Eh) in a cropped potato processing waste water treatment and disposal field. In that field a water table rose to within 60 or 80 cm of the soil surface in the summer. Because of the high water table and an energy source from the potato wastes, nitrate was almost quantitatively denitrified after passing below the plant root zone, thereby avoiding ground water pollution. Potato processors are irrigating with waste water in other areas where the ground water level is many meters below the soil surface. With a deep water table there is probably less denitrification and more pollution potential than with a shallow water table and the nitrogen applied in the waste water must more nearly be balanced with crop uptake.

Potato processing waste water varies in composition. At one location, the chemical oxygen demand (COD) ranged from 550 to 1,530 mg/liter averaging 880 mg/liter (8). The organic matter and part of the inorganic constituents are removed from the waste water by physical, biological, and chemical processes in the soil. These processes renovate the water, making it relatively pure by the time it reaches the ground water.

Soil Eh measurements are fairly reliable. Quispel (6), who presented methods of making these measurements, shows Eh values for aerated and inundated soils. He also reported that Eh values decreased as soil pH increased. Bass Becking et al. (1), who measured the Eh of soil, microorganism cultures, and water, showed similar relationships between Eh and pH. Bohn (2) reported that at pH 7 soil nitrate is reduced at Eh values of +225 mV, or lower. To remove variability in Eh resulting from pH in soils, Eh values are often adjusted to pH 7 by a factor of −59 mV/pH (2). Gilbert et al. (3), Lance et al. (4), Linebarger et al. (5), and Whisler et al. (9) found Eh values low enough to induce denitrification in soil columns and recharge basins to which they applied treated sewage water for ground water recharge. They used black platinum electrodes to measure Eh during wetting and drying cycles.

This paper reports redox potential measurements in soil that resulted from irrigating with potato processing waste water and the potential for denitrification in soils that did not have a shallow water table.

MATERIALS AND METHODS

A site in a potato processing waste water treatment and disposal field in eastern Idaho was instrumented for redox potential measurements. The soil particle size distribution and pH are reported in Table 1. Most of the equipment used in this experiment was redesigned from that previously used (7). Redox potentials were measured with platinized platinum electrodes with a calomel reference electrode in a salt bridge, using a digital pH meter and a strip chart recorder modified for operation from a direct current source (Fig. 1). In our earlier work, problems developed with a stepping switch used for switching electrodes because dirt accumulating on the contacts interrupted the low level signals. To correct the problems, we designed and constructed a solid state switching system that was used throughout the experiments. Design details may be obtained from Mr. Dale Fisher at the Snake River Conservation Research Center, Kimberly, Idaho.

Electrode failures were a problem in earlier experiments. To overcome the problem of poor waterproofing, the junctions between the platinum wire, the bronze welding rod, and the conductor were insulated by filling heat shrink tubing with Dow Corning[1] white bathtub caulk and shrinking the tube around the electrode. A curing time was required to allow the acetic acid which was released in setting of the silicone rubber to diffuse out of the tubing. During the curing period, redox measurements were very erratic, but in a few days the electrodes stabilized. This waterproofing was superior to the epoxy cement seals

[1] Trade name is included for the convenience of the reader and does not imply endorsement by the USDA over other products not mentioned.

Table 1—Soil mechanical analyses and pH of waste water treatment soils at site where redox measurements were made.

Sampling depth	Sand	Silt	Clay	Textural class	pH
cm		%			
0– 15	57.2	26.6	16.2	Sandy loam	7.3
15– 30	50.0	26.6	18.2	Loam/sandy loam	7.3
30– 60	66.3	24.7	9.0	Sandy loam	7.2
60– 90	71.8	22.7	5.5	Sandy loam	7.2
90–120					7.4
120–150	57.8	36.7	5.5	Gravelly sandy loam	–
150–175	69.8	24.2	6.0	Gravelly sandy loam	–

[1] Contribution from the SEA-USDA. This research was supported in part by a grant from the Idaho Potato Commission. Received 24 Dec. 1977.

[2] Soil Scientist, Snake River Conserv. Res. Center, Kimberly, ID 83341, Research Microbiologist, and Biological Science, Technician, U.S. Water Conserv. Lab., Phoenix, AZ 85040, respectively.

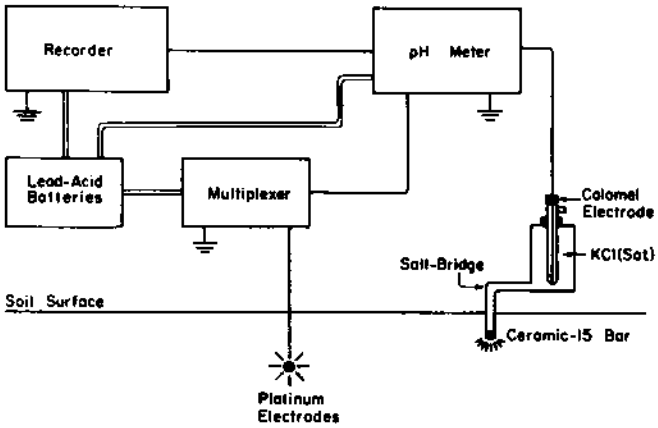

Fig. 1—Diagram of equipment used for measuring and recording redox potentials in the field.

used previously and the electrodes operated in the field for over a year without any failures. After waterproofing, the electrodes were electroplated with platinum oxide and calibrated to within ± 10 mV of a standard or rejected.

Because the platinum oxide coating on the electrodes was very fragile, we carefully buried the electrodes to preserve the coating. The electrodes were buried in the soil by excavating a pit, placing three electrodes in the pit wall at each depth at 150, 120, 90, 60, 30, 15, and 5 cm, refilling the pit, compacting the soil, and covering with grass sod. The calomel electrode and salt bridge were set up as previously described (5). For winter operation, to prevent freezing the reference electrode and salt bridge, an insulated enclosure was heated by a recreational vehicle furnace burning LP gas and thermostated at the desired temperature. Platinum electrode potentials (Ept) were measured at 4-hour intervals from 26 June 1975 until 9 July 1976 with few interruptions for equipment failures. No data were obtained in January and February 1976 and for a short time in August 1975. The individual electrode readings and the means of three replicates at each depth were punched on paper tape, read by a computer, and plotted. All of the electrodes remained operational throughout the 14-mo experiment. Daily mean values from the three electrodes at each depth, observed six times daily were used for publication.

Our experimental plot was irrigated according to our schedule by the waste field operator. The waste water and the soil water from the same depths that the electrodes were placed were sampled at each irrigation, usually monthly. Nitrates in the water samples were analyzed by a specific ion electrode and total-N was determined by a Kjeldahl procedure (8). Waste water irrigations ranged from 6 to 30 cm per month. During the growing season the waste water was supplemented with irrigation water from the canal. Application of waste water during 14 mo totaled 210 cm. The waste water averaged 880 mg COD/liter and was pumped through a pipeline approximately 6.5 km (4 miles), arriving at the field with little or no dissolved oxygen.

RESULTS AND DISCUSSION

The total N concentration of the waste water ranged from a low of 5 mg/liter during August when production of processed potatoes was very low to 64 mg/liter in April when production was near full capacity. Monthly applications of total nitrogen in the waste water ranged from 3 to 168 kg/ha with a total for the 14-mo period of 997 kg/ha.

Redox measurements made at five soil depths for 13 mo are reported in Fig. 2. The 15- and 30-cm depth redox values were similar to the 5-cm depth; therefore, they are not shown. From June 1975 when the experiment was started until its completion in July 1976, each

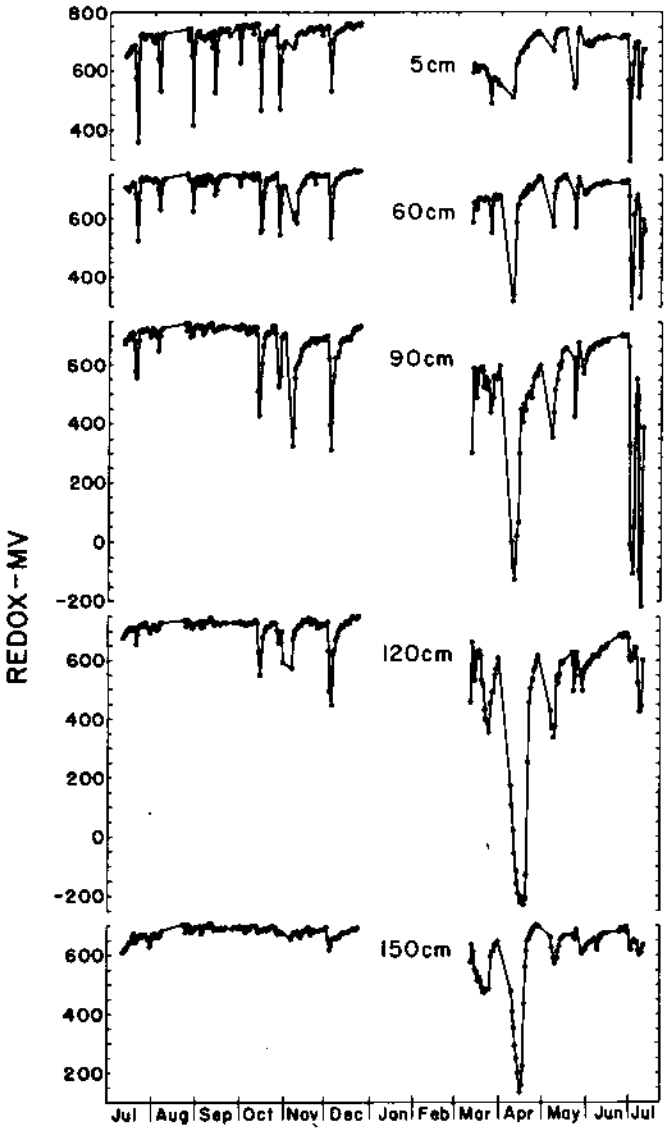

Fig. 2—Redox potentials in a field irrigated with potato processing waste water and waste water mixed with canal water. Redox potentials are corrected to the hydrogen reference electrode but not for pH. No data were obtained in January and February.

irrigation was accompanied by a decrease in redox potential at one or more soil depths.

The first irrigation on 27 June 1975 was followed by redox potentials at the 60-, 90-, and 120-cm depths of +120, −100, and +100 mV, respectively (data not shown). These values are all below the +225 mV threshold for denitrification and should have been accompanied by some denitrification. The low values persisted for 3 days. The zero NO_3^- value in the 150-cm-depth water samples (Table 2) for the July 1975 water sampling indicated that denitrification did occur.

Each irrigation from July through December depressed redox values following irrigations, but none of the minimum Eh values was low enough to cause denitrification. During the winter, biological activity was at a minimum and the decrease in waste water organic matter content was mostly the result of soil physical

Table 2—Waste water and N applications and nitrate-N in water extracted from the 150-cm depth in a field irrigated with potato processing waste water.

Month	Waste water depth, cm	Applied TKN† mg/liter	N applied, kg/ha	Nitrate-N, mg/liter
		1975		
June	13	42	55	4.0
July	6	38	23	0
Aug.	6	5	3	2.6
Sept.	6	13	8	0.8
Oct.	11	19	21	1.0
Nov.	9	35	32	0.2
Dec.	11	50	55	0.3
		1976		
Jan.	29	56	162	3.0
Feb.	30	56	168	9.5
March	30	53	159	12.5
April	16	64	102	1.2
May	15	49	74	4.2
June	14	42	59	1.3
July	14	54	76	0.7
Total	210	Mean 41	Total 997	Mean 3.0

† Total Kjeldahl N.

filtration and chemical reactions. As soil temperatures increased in the spring and biological activity increased, the nominal decreases in redox potential caused by irrigating with anaerobic water were greatly enhanced by waste water irrigation.

The waste water irrigation on 8 Apr. 1976 had the greatest influence on soil redox potentials of any irrigation during the experiment. Irrigating with waste water containing 1,530 mg COD/liter produced intense microbial activity that lowered the redox potentials in the soil profile at all measured depths. The lowering of redox potentials was great enough at the 90-, 120-, and 150-cm depths and with energy available from leached COD (8, code 2f), to cause very strong denitrification (Fig. 2). The low redox potential persisted in the 120-cm depth for approximately 2 weeks. Little nitrate remained in the soil profile after this intense denitrification period (Table 2).

Most of the 14 metric tons/ha of applied organic matter accumulated in the soil during the winter from the waste water irrigation. The soil temperature increased in the spring promoting rapid organic matter decomposition and rapid nitrification under aerobic conditions. The rapid organic matter decomposition and nitrification posed the greatest hazard for nitrate pollution of the soil and ground water of any time during the year.

In May the irrigations with waste water mixed with canal water did not cause Eh to decrease as much as it did in April, probably because of decreased COD and increased aeration from diluting the waste water with canal water. On 27 June and 4 July the plot area was irrigated again with nondiluted waste water. Again, the redox potentials at the 90-cm soil depth decreased enough to cause denitrification that persisted for 3 days.

Waste water containing organic materials becomes anaerobic when held in a clarified tank or pond without aeration or when it is pumped through a pipe for a long distance allowing the microorganisms utilizing the organic materials to consume all of the oxygen from the water. Irrigating with this anaerobic water will decrease the oxygen content of the irrigated soil. During warm weather when biological activity is rapid, and oxygen consumption is rapid, the decrease in Eh in the field may be great enough to pass the denitrification threshold bringing about denitrification for a short time until the soils become unsaturated and air enters the profile. If there is a discontinuity in soil texture, where the soil remains saturated with water for a time, the Eh depression may persist for a longer time than would otherwise be found with uniform soil texture. The soils recover from the low redox potentials rather rapidly after the water drains through, plant growth is normal, and normal reactions associated with aerated soils again develop, including nitrification of the added nitrogenous materials. When the next irrigation comes, some of the nitrate previously produced but not used by the growing plants may be denitrified or leached.

During cool weather, when biological activity in the soil was slow, irrigation with anaerobic water decreased the Eh in the soil, but the decreases were much smaller than those observed in warm weather and were of short duration. Under these conditions the demand for oxygen by microorganisms in the soil was relatively low; Eh did not decrease below the values produced by irrigating with the anaerobic water and significant denitrification did not occur. There was also much less nitrate produced when the organic matter accumulated in the soil because of low temperatures; therefore, the potential for nitrate pollution of the soil system was relatively low.

Nitrate concentrations in the soil profile are cyclic with seasons. They generally remain low during the fall and winter because of low temperatures. Nitrate concentrations increase in the spring because of rapid organic matter decomposition and nitrification. Nitrate use by crops, denitrification, and leaching decrease the soil nitrate concentrations in the summer.

Denitrification in a waste treatment field with shallow water table was shown to be almost quantitative (7). It is interesting to observe that in a field where the water table is 20 m or more below the soil surface, some denitrification can also occur. While denitrification probably is not quantitative in soil with a deep water table, nevertheless, much nitrate appears to be denitrified.

Ground water pollution from nitrate under fields irrigated with potato processing waste water can be greatly decreased by irrigation management practices. The most desirable practice is to fertilize the field by applying waste water at a rate that will supply the nitrogen requirements of the growing crops. When it is necessary to apply more nutrients in the waste water than the growing crops can utilize, manage the system for maximum crop utilization of nitrogen. Then irrigate the field with undiluted waste water at strategic times during the summer season to promote anaerobic conditions in the lower root zone and denitrify the excess nitrate. Such practices should limit the amount of nitrate that will reach the ground water and limit ground water pollution.

LITERATURE CITED

1. Bass Becking, L. G. M., I. R. Kaplan, and D. Moore. 1960. Limits of the natural environments in terms of pH and oxidation-reduction potentials. J. Geol. 68:243–284.
2. Bohn, H. L. 1971. Redox potentials. Soil Sci. 112:39–45.
3. Gilbert, R. G., J. B. Robinson, and J. B. Miller. 1974. The microbiology and nitrogen transformations of a soil recharge basin used for wastewater recharge. p. 87–96. *In* J. Tomlinson (ed.) Proc. Int. Conf. on Land for Waste Manage., Ottawa, Canada, Oct. 1973. Natl. Res. Counc. of canada, LeDroit, Ottawa.
4. Lance, J. C., and F. D. Whisler. 1972. Nitrogen balance in soil columns intermittently flooded with sewage effluent. J. Environ. Qual. 1:180–186.
5. Linebarger, R. S., F. D. Whisler, and J. C. Lance. 1975. A new technique for rapid and continuous measurements of redox potentials. Soil Sci. Soc. Am. Proc. 39:375–377.
6. Quispel, A. 1947. Measurements of the oxidation-reduction potential of normal and inundated soils. Soil Sci. 63:265–275.
7. Smith, J. H., R. G. Gilbert, and J. B. Miller. 1976. Redox potentials and denitrification in a cropped potato processing waste water treatment field. J. Environ. Qual. 5:397–399.
8. Smith, J. H., C. W. Robbins, J. A. Bondurant, and C. W. Hayden. 1977. Treatment of potato processing wastewater on agricultural land: Water and organic loading, and the fate of applied plant nutrients. p. 769–781. *In* Raymond C. Loehr (ed.) Land as a waste management alternative. Proc. of the 1976 Cornell Agric. Waste Manage. Conf., 28–30 Apr. 1976, Rochester, N.Y.
9. Whisler, F. D., J. C. Lance, and R. S. Linebarger. 1974. Redox potentials in soil columns intermittently flooded with sewage water. J. Environ. Qual. 3:68–73.

Purchased by the U.S. Department of Agriculture, SEA-FR, for official use