Reprinted from the *Soil Science Society of America Journal*
Volume 49, no. 6, November–December 1985
677 South Segoe Rd., Madison, WI 53711 USA

SAMPLING PORTS FOR AN INSTRUMENTED LYSIMETER SYSTEM[1]

C. W. ROBBINS[2]

Abstract

An improved method for mounting ceramic-moisture sampling cups and soil-atmosphere sampling tubes in lysimeters is described. The 0.31-m diam by 1.18-m deep lysimeters were constructed from low pressure polyvinyl chloride irrigation pipe (PVC) and contained soil 1.0-m deep. Tensiometer tubes with attached cups, and open-ended pyrex gas sampling tubes were installed at three depths, using sealing ports in the lysimeter walls. The sealing ports were constructed from half of a PVC pipe compression coupler. This system allows for inserting the sampling cups and tubes after the soil has been added and settled. The sampling equipment can also be removed before the soil is sampled and removed when studies are completed. Individual sampling units can also be removed for cleaning or repair during the study without disrupting lysimeter operation. This was not possible with earlier described lysimeter systems.

Additional Index Words: **tensiometer, ceramic cup, soil air, soil atmosphere.**

Robbins, C.W. 1985. Sampling ports for an instrumented lysimeter system. Soil Sci. Soc. Am. J. 49:1586–1587.

AN INSTRUMENTED, continuous weighing lysimeter system designed for monitoring irrigation water quality and management effects on soil solution composition was previously described (Robbins and Willardson, 1980). The lysimeters were constructed from 0.31-m diam by 1.18-m long PVC low pressure irrigation pipe sections. The upper end was reinforced with a 0.12-m polyvinyl chloride (PVC) band and the bottom was a flat end cap cemented in place. Three 13-mm chloronated polyvinyl chloride (hot water pipe) pipes (CPVC) were cemented into the lysimeter sides at 0.30-, 0.55-, and 0.80-m above the bottom of the lysimeters. A porous ceramic cup was heat sealed into the inner end of the CPVC pipes and the outer end was open for inserting the sampling and evacuating tubes. A drain pipe was placed in the end cap on the bottom and covered with 0.05 m of coarse sand prior to filling the lysimeter with soil. The addition of the sand below the soil gave final placement of the ceramic tubes at 0.25-, 0.50-, and 0.75-m above the bottom of the added soil. Wooden frames were constructed and each frame supported four lysimeters. Each lysimeter rested on a small, water-filled tire innertube. The butyl innertubes were connected to clear plastic manometer tubes that were calibrated and used to record weight changes due to irrigation, drainage and evapotranspiration.

These lysimeters were used for several studies. At the end of each study, the soils were sampled by depth and the remaining soil was washed out. Several ceramic cups or plastic tubes were broken during sampling and cleaning. If the center or lower cups or the bottom drain pipe were broken, the entire lysimeter had to be replaced. Others who followed the original design have had the same experience.

A more recent study was set up that required soil-atmosphere gas sampling in addition to the soil solution samples at various depths. Because of the previous equipment and sampling problems and the need for gas sampling ports new lysimeters were constructed. The modifications and improvements incorporated in the new lysimeters are described here.

Materials and Mechanical Design

Sixteen lysimeters were constructed from 0.31-m diam white PVC low pressure irrigation pipe. The pipe was cut in 1.18-m lengths so the final lysimeter would hold a 1.0-m depth of soil and have sufficient freeboard for irrigation water ponding. The perforated drain pipes were constructed and mounted in the end caps as previously described (Robbins and Willardson, 1980). The end caps were not cemented to the bottom of the PVC pipe as was done on previous lysimeters since a water table was not allowed in the lysimeters.

Two vertical columns of 30-mm diam holes at 0.25, 0.50, and 0.75 m from the soil surface were made at 90° to each other. An adapter and seal system were made for each hole by cutting the center section (approximately 45 mm) from a PVC pipe compression coupler (Fig. 1A). This left approximately 12 mm of the center section on each end beyond the compression nut threads. One half of each coupler was then cemented into a hole in the side of the lysimeters

[1] Contribution from USDA-ARS, Snake River Conservation Research Center, Kimberly, ID 83341. Received 8 Apr. 1985. Approved 7 June 1985.

[2] Soil Scientist, USDA-ARS, Snake River Conservation Research Center, Kimberly, ID 83341.

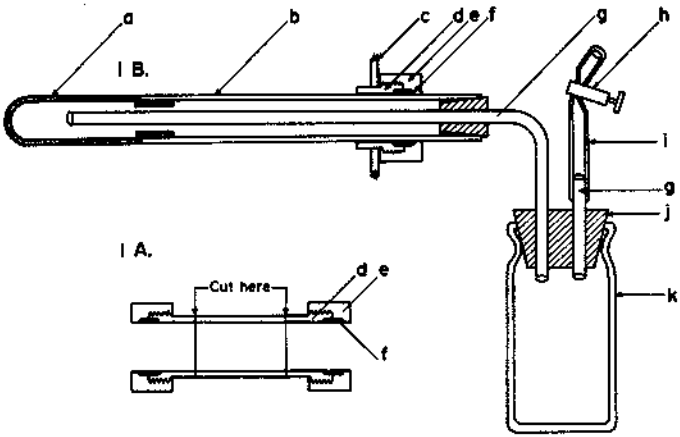

Fig. 1. (A) PVC pipe coupler showing cut locations for making two sample port seals. (B) complete water extraction equipment (a) ceramic cup, (b) PVC tube from tensiometer, (c) lysimeter wall, (d) coupler body, (e) compression nut, (f) rubber seal, (g) plexiglass tubing, (h) hose clamp. (i) plastic tubing, (j) rubber stopper, and (k) sample bottle).

(Fig. 1B). The sampling tubes were then inserted into the soil columns and sealed in place through the ports.

The coupler had been designed for splicing 12.5-mm (0.5 in.) iron pipe size (IPS), PVC water pipe that had a 22-mm outside diam. A 22-mm outside diam teniometer tube and ceramic cup was cut to an overall length of 0.23 m. After the lysimeters were filled with soil and compacted to the desired bulk density, the tensiometer tubes were pushed into the soil and the rubber seals were tightened into place with the compression nuts. A tensiometer tube was inserted 0.15 m into the soil at each depth. The water sampling bottle and tubes were then added (Fig. 1B). A 22-mm hole was made 0.15-m deep into the soil from the side at each of the remaining ports and a pyrex boiler gauge, thick walled tube was placed into the hole. The boiler gauge tube was 19-mm outside diam and 0.23-m long. To make a tight fit, a gasket was made around the glass tube by wrapping it with black electrical tape. After securing the glass tube in place, the outer end was plugged with a 13-mm rubber septum. The inner end was left open for soil gasses to diffuse into the tube.

Comments

Water samples were extracted from the tensiometer tubes as previously described (Robbins and Willardson, 1980) and the gas samples were either taken from the glass tubes with a hypodermic needle on a 20-mL syringe or with a needle coupled to a sampling wand on a portable gas chromatograph.

By making the ceramic cup tubes and the glass gas sampling tubes removable, the soil could be added, compacted, irrigated, and settled in the lysimeters without chance of sampling tube damage and unnecessary stress on the lysimeter walls. Short dummy plugs were put into the ports during soil addition. More uniform soil settling was obtained under these conditions than when the ceramic tubes were in place during soil addition. During the study, if a ceramic cup cracked or was plugged, or if a glass tube became plugged, they could be removed, repaired, or cleaned, and replaced immediately. If soil-ceramic cup contact was not complete, contact was easily made by loosening the compression nut, gently pushing the tensiometer tube against the soil and tightening the compression nut. On several occasions, drawing air from the glass tubes when the soil was near saturation drew soil or water into the glass tubes. By having glass tubes the content could be visually inspected without removing the septums. Visual inspection is important since moisture or wet soil will plug and sometimes damage the portable gas chromatograph.

Once a lysimeter study was completed, both sets of tubes were removed and soil samples by depth were taken without damaging the tubes, which were not in the way for sampling and cleaning. After removing the samples the remaining soil was washed out after knocking the bottom off by gently pounding around its edge since it was not cemented to the pipe on this set of lysimeters. As long as the drainage tubes were kept clean and open, the water table in the bottom never became deeper than the end plugs were high. These changes made the lysimeter much easier to fill with soil at the beginning, and easier to sample and clean at the end of each study. These lysimeters have each been used three times and four of them have been used four times. These compression couplers come in a wide variety of sizes and could be used for sampling or monitoring equipment with diameters different than those used in this study.

References

Robbins, C.W. and L.S. Willardson. 1980. An instrumented lysimeter system for monitoring salt and water movement. Trans. Am. Soc. Agric. Eng. 23:109–111.