Evaluation of the Vane-Type FLOW METER

A. R. Robinson
Member ASAE

THE vane-type flow meter was calibrated for a range of operating conditions both in the hydraulics laboratory at Colorado State University and through a field trial. Three meters were tested, all of which were made for a 2-ft rectangular section. Each of the meters was a production model furnished by the manufacturer*.

The early development of the vane meter was made by Ralph L. Parshall starting about 1948. The development was inspired by need for a simple, direct-reading device which would give reasonable accuracy and would operate at practically no loss of head. Disadvantages of most devices in present use are that a considerable loss of head is usually required for correct operation and that, for most, a reading of depth must be converted to flow by use of tables or charts. In many cases it has been found that these two items limit the use of the devices. Another great need exists for a device that will work under conditions of very low velocities and submerged conditions. Most of the existing devices will not operate at all under these conditions. It has been advanced that the vane-type meter operates very successfully for this condition and that its action is not affected by variation of approach velocity or by any downstream condition.

The flow meter has been developed so that vanes of different shapes are available for measurement of flow in different cross sections. The vane shape was so determined that, for a constant flow, the meter should indicate the same flow for high velocities and shallow depths as for slower velocities and greater depths. The shape of the vane integrates the force due to the flowing water for a range of velocities and depths under constant discharge conditions.

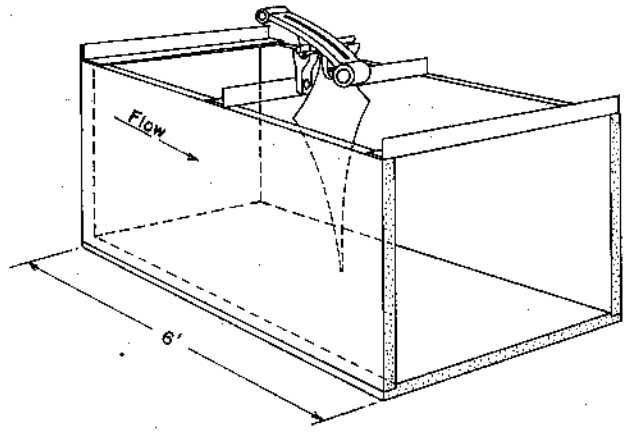

Fig. 1 Vane meter in a rectangular section

The vane must be suspended in a specified section of defined shape and size. Sections being recommended are 6 ft in length with the meter mounted approximately at the halfway point. These measuring sections may be either trapezozidal or rectangular, but must conform to the shape for which the meter was developed and calibrated.

The indicating device in the head of the meter consists of a liquid-filled tube mounted opposite a calibrated scale. This curvature of the head was predetermined in the laboratory. In the liquid-filled tube is a small air bubble which moves along the curved tube depending on the deflection of the vane. The amount of flow is then indicated on the scale opposite the bubble in the tube. This scale can be marked in cubic feet per second, gallons per minute, or any prescribed unit of discharge. A meter being used in a rectangular section is shown as Fig. 1.

Description of Tests

Most of the tests were made in a 2-ft-wide, glass wall, testing flume which is part of the permanent equipment in the hydraulics laboratory. This flume was used by Parshall for much of the early development work of the vane meter. For these tests the flowmeter was installed at a point which gave approximately a 15-ft length of unobstructed channel immediately upstream. The meters were installed very carefully in the manner prescribed by the developers. This included proper clearance of the tip from the floor and the meter being level and exactly at right angles to the direction of flow.

To determine the effect of the approach velocity profile on the operation of the meter, a lattice baffle was installed 8 ft upstream from the measuring section for some of the tests. This baffle consisted of 1 x 1-in. strips of lumber having openings 1⅜ in. square. In effect the baffles changed the velocity distribution at the measuring section so that this variation in velocity profile, as it affected meter operation, could be studied. The baffle is not a recommended feature of the field installation.

The discharge was determined using precalibrated

Paper prepared expressly as an "Instrument News" joint contribution from Colorado State University in cooperation with the Northern Plains Branch (SWCRD, ARS), U.S. Department of Agriculture.

The author — A. R. ROBINSON — is civil and agricultural engineer (ARS), U.S. Department of Agriculture and Colorado State University.

*Meters for the tests reported were furnished by the Applied Research Co. Trade and company names are included for the benefit of the reader and do not infer endorsement or preferential treatment of the product listed by the U.S. Department of Agriculture.

This article is reprinted from AGRICULTURAL ENGINEERING (vol. 44, no. 7, pp. 374-375, 381, July 1963), the Journal of the American Society of Agricultural Engineers, St. Joseph, Michigan

orifice plates in the discharge line from the pump. Flows up to about 5 cfs were used, with the depth of flow for a given discharge being varied with an adjustable tailgate. Usually, for a constant discharge, five depths of flow and the corresponding velocities were used.

For the field tests an existing concrete box on a farm lateral which was 2 ft wide and 2 ft deep was used with the meter installed 3 ft from the upstream end. The box was located approximately 150 ft downstream from the headgate on the lateral.

A 1-ft Parshall measuring flume was installed immediately downstream from the meter section. To insure that the flume was not under submergence during the test periods, depths of flow at the point for determining submergence effect were measured. With these measurements it was determined that submergence was not a factor during the flume operation so that the free-flow discharge relationship was used throughout the testing. An adjustable tailgate was used in the ditch downstream from the meter section to vary the depth of flow through the section for a given discharge.

Presentation and Evaluation of Data

For the operation of the meter, zones A and B have been specified by the manufacturer. Zone A is the recommended range of operation for greater accuracy, but zone B also covers a usable range of operation. Actually these zones limit the range of velocities with those in zone B being higher than those in zone A. Depths shallower than specified for zone B would necessarily mean much higher velocities, and therefore are not in a recommended zone of operation. These operation zones are shown in Figs. 2 and 3.

For the laboratory tests shown in Fig. 2, relatively constant discharges of 1, 2, 3, 4, and 5 cfs were used. For each discharge the depth was varied in the 2-ft-wide section so that both the A and B zones of operation were included. For this comparison a ratio of the discharge as indicated by the vane meter to that determined from the orifice in the pump-discharge line was used. A ratio of 1.0 would indicate that the two determinations were the same. If the ratio were 0.9, then the vane discharge would be 10 percent lower than that from the orifice meter. Conversely, for a ratio of 1.10 the vane discharge determination would be 10 percent higher than that from the orifice meter. The normal section indicated in Fig. 2 was the 2-ft-wide glass wall flume with 15 ft of unobstructed approach. The second condition was with the baffle installed 8 ft upstream from the vane meter section.

Considering first those tests in the laboratory channel for the A zone and the normal flume section, it is noted that, for flows of 1 to 3 cfs, the vane meter indicated discharges that were always equal to or higher than those from the orifice meters. For the higher flows the vane meter gave discharges that were both lower and greater than by the orifice method. Almost identical trends were noted for each of three meters tested. For the three lower flows with the so-called normal section, the vane meter overregistered the flow by as much as 9 percent at the intermediate depths. However, the average range of this variation was in the order of 5 percent. As an example, for a flow of 3 cfs the ratio varied from 1.025 to 1.068 for the A zone. Considering the two higher flows under

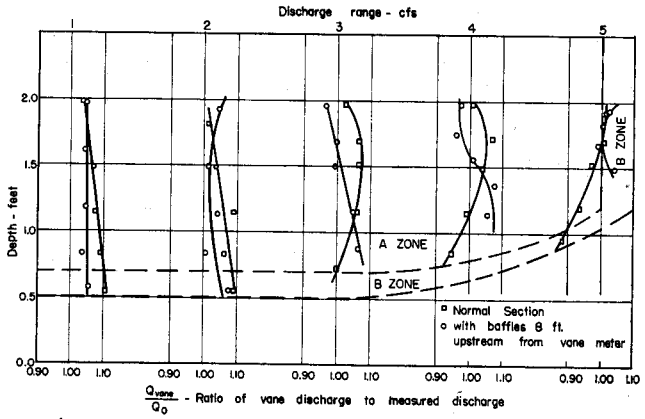

Fig. 2 Laboratory tests of the vane meter

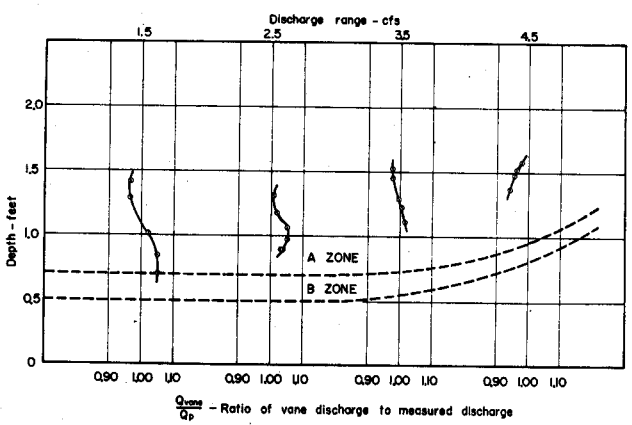

Fig. 3 Field tests of the vane meter

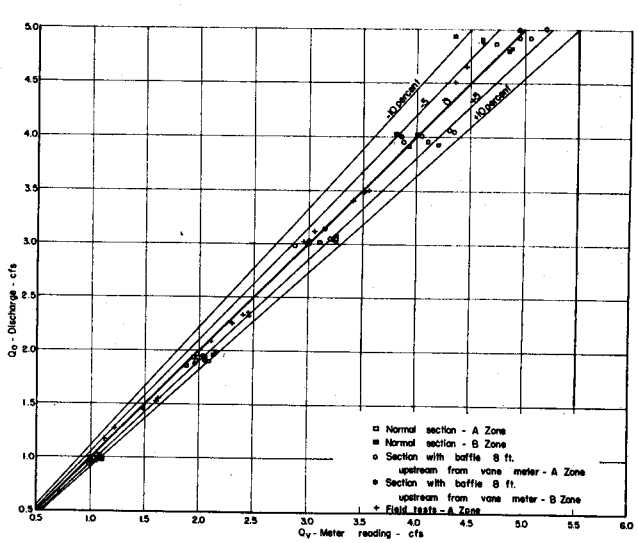

Fig. 4 Laboratory and field tests of the vane meter

this condition, there was a much wider variation in the determined discharges. Here again the trends were identical for the three meters and the ratios varied. For 4 cfs at the shallower depth this ratio was about 0.94, whereas at depths nearer 1.7 feet it was 1.07.

To introduce a different approach condition baffles were installed 8 feet upstream from the measuring point as previously discussed. This situation introduced turbulence and resulted in a shorter length for establishment of the velocity profile. More uniform velocities throughout the section would exist for this condition. The effect of this situation on the operation of the meters is illustrated in Fig. 2. In general, an entirely different relationship was found than with the previous condition, illustrating that the approach-velocity profile does exert a considerable influence on the operation of the meter as would be expected.

In general, the laboratory tests made in the B zone of operation show a wider range in deviation of vane discharge from the independent method. Differences up to plus 11 percent for the lower flows and minus 12 percent at the higher flows were observed.

The results of observations on the meter operation under field conditions are shown in Fig. 3. The effect of a range of depths for each of four different discharge ranges are shown. For flows of 1.5 and 3.5 cfs the vane meter gave discharges that were both less and greater than those determined by the Parshall flume. At an intermediate flow of 2.5 cfs the vane meter gave flows that were always larger, and at 4.5 cfs always smaller, than those from the Parshall flume determination. This amounted to a total variation of about 8 percent for the lowest flow and 4 percent for the others. All these tests were within the A zone of operation. Considering only the lowest and highest ratios results in an overall expected accuracy of about ±5 percent for a total possible range of 10 percent.

Another method of presenting the results of the vane meter tests is shown in Fig. 4. The comparison of the discharge as determined by the vane meter and that of the independent method of orifice or Parshall flume is given. If the two determinations are the same, then a 1-to-1 relationship given by the heavier line applies. For flows in the A zone of operation for the laboratory tests, the deviations are generally within ±5 percent, although there are several points which fall outside these zones. In general, for the B zone of operation the points show a wider deviation.

Field tests comparing the discharge of the vane meter with that of an accurately installed Parshall flume also are given in Fig. 4. Here the maximum deviations are near ±5 percent with most of the points falling within ±4 percent accuracy. These points represent carefully observed data where, in most cases, duplicate observations were made.

Discussion of Results

From the results of these tests it is evident that approach conditions and the resulting approach-velocity profiles do affect the accuracy of the flow meter. With the long, smooth-walled section, somewhat greater deviations were noted than under the other conditions. With this condition the velocities in the vertical section might range from twice the average velocity near the surface to one-half near the bottom.

For the case of the lattice baffle installed upstream from the measuring point in the laboratory flume, the velocities in a center-line profile would be more nearly the same. This would also be true for the field-measuring section, primarily because the measurements are made immediately downstream from a section of converging flow which results in a more uniform velocity profile.

An accuracy of about ±5 percent could be expected from the vane meters used in these tests. At intermediate depths the accuracy is best, usually being in the range of 0 to ±5 percent. The largest deviations in the A zone were usually at the lower depths and corresponding higher velocities.

Other items not investigated in this study may affect the accuracy of the meter. One of these is magnitude and direction of the wind at the time the discharge measurement is being made. Another is the presence of debris in the flow. The latter should not be important if care is taken to clean the vane before each reading.