INEXPENSIVE PRESSURE REGULATION FOR IRRIGATION PIPELINES

D. C. Kincaid, D. G. Romspert

ABSTRACT. *Pressurized pipelines are used on the majority of U.S. irrigated lands. Pressure regulation is needed in many systems with variable topography, and available pressure regulating valves for larger flows are heavy and expensive. An alternative inexpensive, lightweight regulating device is needed. A system to automatically control downstream pressure or flow rate in an irrigation pipeline using a butterfly disk was developed. A spring-loaded cylinder actuator is used to control the butterfly disk angle to maintain a constant pre-set downstream pressure. The unit can be built inexpensively for different pipe sizes. Valve control design equations were developed for predicting the control parameters for different sized pipelines and pressure ranges.* **Keywords.** *Irrigation, Pipelines, Pressure regulation.*

Pressurized irrigation is used on about 10 million ha (25 million acre) in the United States and usage is increasing. Many sprinkler systems operate on variable topography and require pressure regulation to maintain sprinkler nozzles within a desirable pressure range. Small pressure regulators are available for individual sprinklers, but these are limited to flows of about 80 L/min (20 gpm) (examples manufactured by Nelson Irrigation Corp., Walla Walla, Wash., or Senninger Inc., Orlando, Fla.). Using a pressure regulator on every sprinkler is expensive, and maintenance can be a problem. Flow control sprinkler nozzles are available (Nelson Irrigation Corp. or Rainbird, Glendora, Calif.), but are relatively expensive compared to fixed orifice nozzles, and may need pressure regulation if pressures exceed recommended levels. Diaphragm valves are available which can be used to regulate downstream pressure (OCV Control Valves, Tulsa, Okla.; Inbal Control Valves, Kennewick, Wash.; and Bermad Control Valves, Anaheim, Calif.), but these are usually heavy and expensive [approximately $350 for a 75 mm (3 in.) size], although lower-cost plastic diaphragm valves are becoming available for the smaller sizes. An inexpensive, lightweight pressure regulating valve is needed for use with movable sprinkler laterals. Sprinkler laterals are commonly between 75 to 150 mm (3 to 6 in.) in diameter, and carry flows between 200 to 2 000 L/min (50 to 500 gpm). Head loss requirements are usually in the range of 30 to 200 kPa (5 to 30 psi).

Article was submitted for publication in January 1995; reviewed and approved for publication by the Soil and Water Div. of ASAE in December 1995.

Names of products or companies are shown for the benefit of the reader and do not imply endorsement or preferential treatment of the company or products shown by the USDA.

The authors are **Dennis C. Kincaid**, ***ASAE Member Engineer***, and **David G. Romspert**, Hydrologic Technician, USDA-Agricultural Research Service, Soil and Water Management Research, Kimberly, Idaho. **Corresponding author:** Dennis C. Kincaid, USDA-ARS, 3793 N 3600 E, Kimberly, ID 83341; telephone: 208-423-6503; e-mail: <kincaid@kimberly.ars.pn.usbr.gov>.

Humpherys (1986) described the use of manually adjusted butterfly disks for energy dissipation in low pressure irrigation pipelines and gave head loss data for commercial butterfly valves and partial butterfly disks. Since manually adjusted energy dissipators need to be readjusted for any change in flow conditions, automatic pressure control is needed for both low and high pressure pipelines. Available diaphragm valves would be too expensive for the pipe sizes used in surface irrigation.

The objective of this study was to develop a method by which a commercial air-type cylinder actuator can be used with a butterfly disk to automatically control downstream pressure (or flow) in pipelines. Equations for predicting the device performance for different pipe sizes, flow rates, and pressure levels are given. The device could also be used for flow control, but this aspect is not covered in this article.

DESIGN OF THE BUTTERFLY DISK AND CONTROL

Figure 1 shows the general design of the butterfly disk and figure 2 shows the disk and control system. A 75-mm (3-in.) inside diameter steel pipe was used in these tests to mount the butterfly and control. The butterfly consisted of two, part-circle plates welded to a steel pipe sleeve. The shaft [9.5 mm (0.375 in.) diameter] fitted through the butterfly sleeve, and a set screw secured the sleeve to the shaft. Holes were drilled through the pipe to provide bearings for the shaft. A cap plate sealed the shaft hole on one side, and the shaft extended through the pipe wall. A seal plate was attached to the pipe wall and pressed the O-ring against the shaft and hole to prevent leakage.

The lever was a part-circle plate (fig. 2) with sufficient radius and angular width to accommodate the desired range of adjustment for these studies. The plate assembly was attached to the shaft with a set screw to allow angle adjustment between the butterfly and lever plate. Pivot pins were placed on opposite sides of the lever plate, allowing the spring and cylinder to operate side by side. The base of the cylinder and the external spring were mounted at the same pivot point, fixed to the pipe, but movable to allow

 © 1996 American Society of Agricultural Engineers 0883-8542 / 96 / 1202-0203

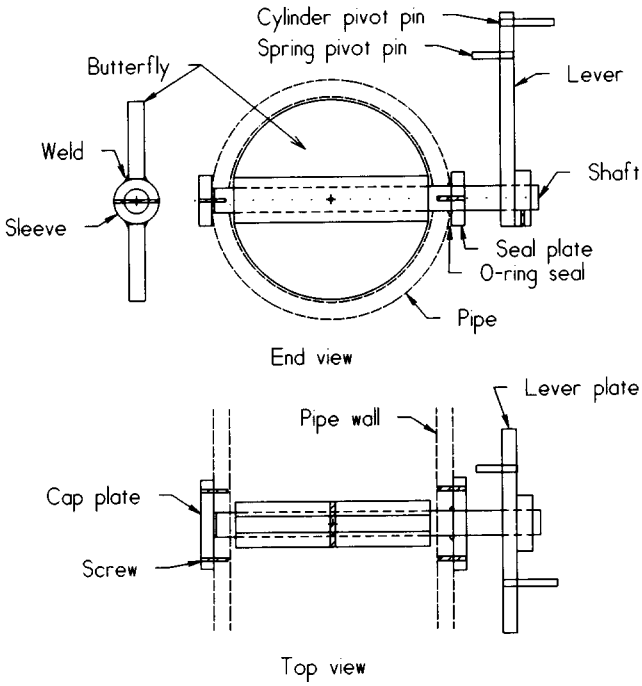

Figure 1–Design details of butterfly valve, shaft, and lever plate.

adjustment of the base length B. Other details of the control cylinder and spring mounting are shown in figure 3.

Control Concept and Equations

The parameters describing the mechanics of the control system are shown in figure 2. The butterfly valve disk is shown partially open. The cylinder base end was attached to an adjustable pivot located on the pipeline, and the actuating rod was attached to the butterfly lever pivot. The external spring (and the internal spring supplied with most single acting cylinders) resists the cylinder force, and is adjusted to obtain the desired downstream pressure and operating characteristics. The external spring was attached to the same cylinder-base pivot to simplify the development of the equations.

The following pressures (kPa) are defined: P_1 is upstream pipeline pressure, P_o is pipeline outlet pressure, and P_2 is pressure downstream of the butterfly valve. A flexible pressure tube is connected from the primary pressure port at the cylinder base to the downstream pressure tap (P_2). In the pressure control configuration the

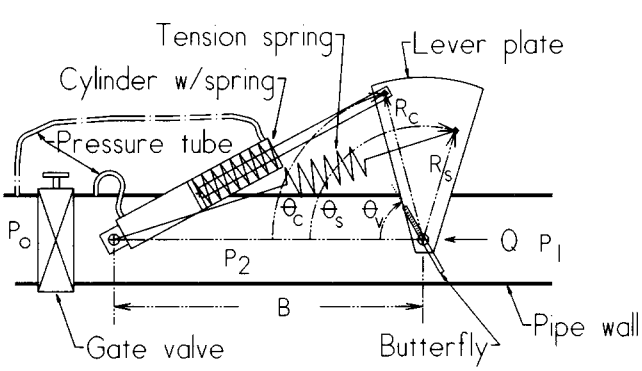

Figure 2–Schematic of butterfly valve, control, and design parameters.

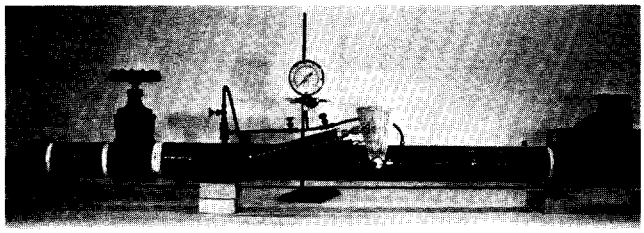

(a)

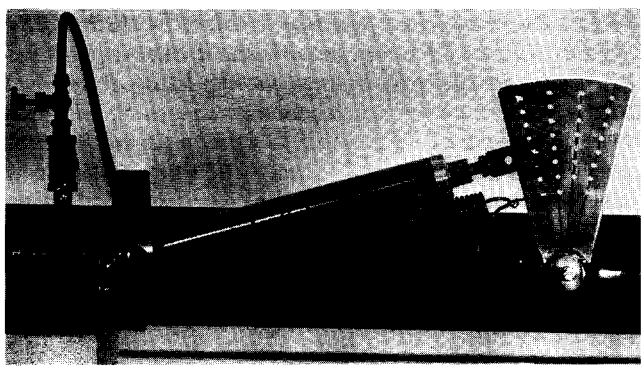

(b)

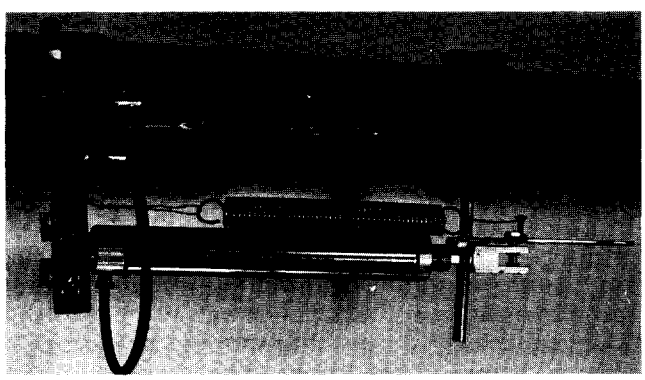

(c)

Figure 3–Laboratory setup for testing the 75-mm (3-in.) pressure regulator.

secondary cylinder port is open to the atmosphere, whereas in the flow control configuration, a second tube is connected from the secondary cylinder port to the outlet side of the downstream valve (P_o) (fig. 2). In pressure control mode, the gate valve is used only to simulate a downstream system head curve as defined by equation 6 below.

The cylinder is retracted and the valve is normally open at low pressure. As the upstream (P_1) pressure increases, the valve remains open until a preset pressure is reached. As upstream pressure increases further, P_2 also increases, causing the cylinder to extend and closing the butterfly disk, thus limiting the downstream pressure to the preset level. The preset level is set by adjusting the initial spring tension.

The valve control mechanics are described by standard trigonometric equations, with the assumptions that (1) the hydraulic forces on the valve are balanced and produce no net torque on the shaft, and (2) friction in the cylinder and

shaft can be neglected. The following angles (°) are known and defined as follows: θ_v is valve closing angle, θ_c is cylinder attachment angle, and θ_s is spring attachment angle. Thus, for any given value of θ_v, the corresponding values of θ_c and θ_s are known. Therefore, the lengths (mm) (distance between pivot points) of the cylinder and spring are determined by:

$$L_c = (R_c^2 + B^2 - 2\,B\,R_c \cos\theta_c)^{0.5} \quad (1)$$

$$L_s = (R_s^2 + B^2 - 2\,B\,R_s \cos\theta_s)^{0.5} \quad (2)$$

where

- B = base length between the fixed pivot and the valve shaft
- L_c = cylinder length
- L_s = external spring length
- L_{c0} = initial cylinder length
- L_{s0} = initial external spring length
- R_c = cylinder attachment radius
- R_s = spring attachment radius

The initial or minimum lengths L_{c0} and L_{s0} are computed by equations 1 and 2 with $\theta_c = \theta_{c0}$ and $\theta_s = \theta_{s0}$, at the valve open position where $\theta_v = \theta_{v0}$.

The shaft torque produced by the cylinder pressure force (minus the internal spring force) acting on the lever is equal and opposite to the shaft torque produced by the external spring acting on the lever. The downstream pressure (cylinder pressure) required to maintain the valve at a fixed position can be determined by:

$$P_2 = \{S_r\,[F_{s0} + k_s(L_s - L_{s0})] + F_{c0} + k_c\,(L_c - L_{c0})\} / C \quad (3)$$

where

- C (mm^2) = cylinder piston area
- F_{c0} (N) = initial cylinder force
- F_{s0} (N) = initial spring force
- k_c (N/mm) = the cylinder spring constant
- k_s (N/mm) = the external spring constant
- S_r = dimensionless parameter defined by the equation

$$S_r = (L_c/L_s)\{[(R_s + B - L_s)(L_s + B - R_s)]/[(R_c + B - L_c)(L_c + B - R_c)]\}^{0.5} \quad (4)$$

Equations 1 through 4 comprise the valve control model. The valve hydraulics and downstream flow conditions are needed to complete the model. Humphreys (1986), derived the head loss coefficient of the butterfly valve as:

$$k_b = a \exp(b\theta_v) \quad (5)$$

where

- k_b = ratio of the head loss through the butterfly valve to the main-pipe velocity head
- a and b = constants
- θ_v = valve closing angle

The butterfly valve is assumed to be supplying flow to a fixed system (e.g., sprinkler laterals) which is simulated by the downstream gate valve:

$$Q = k_u\,C_v\,(P_2 - P_0)^{0.5} \quad (6)$$

where

- Q = total flow in the pipeline
- C_v = standard industry flow coefficient defined as the flow through the valve in gallons per minute (gpm) at a pressure loss of one psi
- k_u = a units conversion factor (k_u = 1 for Q in gpm and P in psi, k_u = 1.441 for Q in L/min and P in kPa)

Equations 1 through 6 comprise a complete system performance model. There is no simple way to solve directly for P_2 as a function of P_1. However, by specifying the geometric parameters and varying the valve position, the system performance can be calculated as follows:

1. Specify values for θ_{v0}, θ_{c0}, θ_{s0}, calculate L_{c0}, and L_{s0} (eqs. 1 and 2).
2. Assume a value for θ_v (e.g., θ_{v0} + 5°), calculate L_c and L_s (eqs. 1 and 2).
3. Calculate S_r and P_2 (eqs. 4 and 3).
4. Calculate Q (eq. 6).
5. Using Q, calculate the velocity head ($V^2/2g$) and the head loss through the valve (eq. 5).
6. Add the head loss to the value of P_2 to obtain P_1.
7. Repeat steps 2 through 6 for increasing values of θ_v, and construct a plot of P_2 versus P_1. This is the performance curve for the pressure regulator.

The model calculations were done on a spreadsheet with fixed parameters in specified cells, incremental valve angle, calculated angles, lengths, flows, and pressures in separate columns. The effect of changing any parameter can be easily evaluated. Simulation results shown in figures 4 through 6 demonstrate the effect of varying certain parameters. Parameter values from test 2 in table 1 were used. As the spring attachment angle θ_{s0} is increased, the downstream pressure curve flattens out and can actually decrease with increasing upstream pressure (fig. 4). At larger values of θ_{s0} the effective spring torque decreases

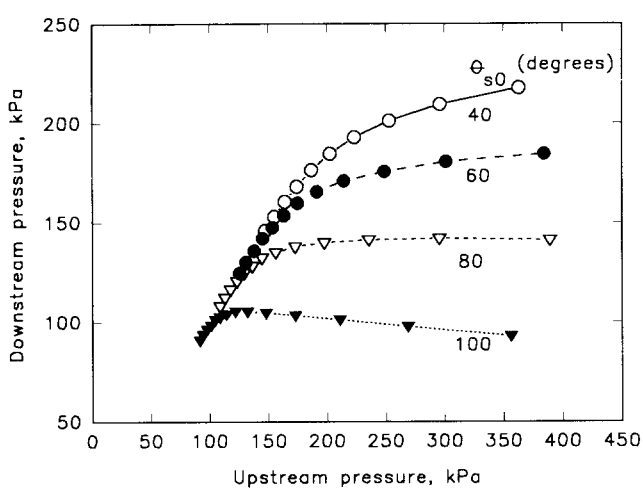

Figure 4–Effect of changing the spring pivot angle on regulator performance (100 kPa = 14.5 psi).

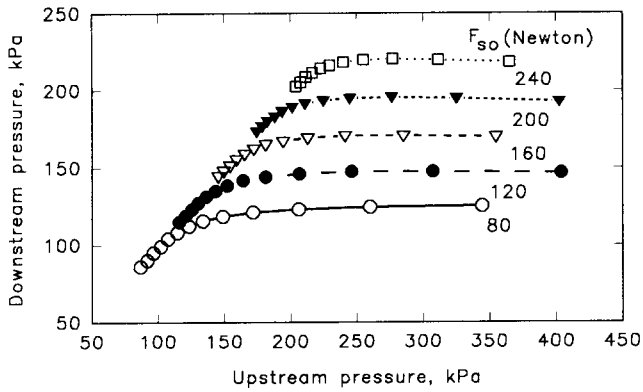

Figure 5–Effect of changing the spring tension on regulator performance (100 kPa = 14.5 psi, 1 Newton = 0.225 lb).

rapidly, allowing the cylinder to close the valve at lower downstream pressures. As the initial spring tension F_{s0} is increased, the downstream preset pressure level increases (fig. 5). Thus, the desired downstream pressure can be easily changed by adjusting the spring tension. Varying C_v (fig. 6) shows that the control maintains a nearly constant downstream pressure over a wide range of flow rates.

Methods

The air cylinders used (Clippard Instrument Laboratory, Inc., 7390 Colerain Road, Cincinnati, OH 45239) were stainless steel and are available in different bore diameters [7.9 to 64 mm (0.3125 to 2.5 in.)] and stroke lengths. Single acting cylinders normally contain an internal return spring, while double acting cylinders do not.

A series of laboratory tests were run to evaluate valve control performance and to compare measured valve performance with predicted results. The laboratory setup included a pump, flow meter (not shown in fig. 3a), and gate valve immediately upstream of the butterfly valve, which controlled the upstream pressure. A calibrated pressure gauge was used to measure all pressures. Tests were conducted using several butterfly disk diameters, cylinder diameters, and cylinder and spring geometric configurations to determine the best arrangement. The

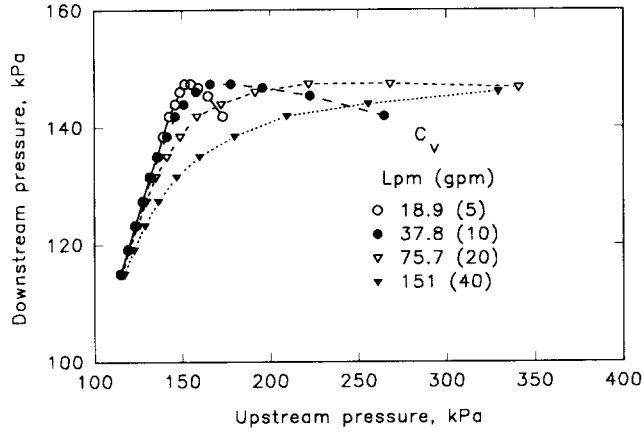

Figure 6–Effect of changing downstream valve coefficient on regulator performance (100 kPa = 14.5 PSI).

Table 1. Values of the parameters for selected laboratory tests

Parameter	Test 1	Test 2	Test 3
Cylinder model*	USR-17-4	USR-20-4	USR-20-4
Cylinder cost	$20	$35	$35
Bore diameter (mm)	27	32	32
Stroke (mm)	102	102	102
a	0.12	0.12	0.12
b	0.096	0.096	0.096
B (mm)	315	355	348
C (mm^2)	572	792	792
F_{c0} (N)	11	22.2	22.2
F_{s0} (N)	70	110	140
k_c (N/mm)	0.28	0.22	0.22
k_s (N/mm)	0.78	0.78	0.78
C_v (gpm)	23	21.9	16.9
R_c (mm)	90	90	70
R_s (mm)	60	60	90
θ_{v0} (°)	22	22	23
θ_{c0} (°)	43	42	42
θ_{s0} (°)	73	62	62
P_o (kPa)	0	0	0
Q (app.) (L/min)	400	400	380

* Clippard Instrument Laboratory, Inc., 7390 Colerain Road, Cincinnati, OH 45239.

configuration shown in figure 3 was selected as being the most convenient mechanically and for equation development. The base pivot points of the cylinder and spring may be separated and placed in any rotary position around the valve shaft, but the general operating characteristics would be the same.

Using Humphreys (1986) results, we estimated that the valve area should be 90 to 95% of the pipe area to attain sufficient head loss for most applications. The three tests reported used a symmetrical butterfly disk which had an area that was 91% of the 78-mm ID (3-in.) steel pipe. A test was run to determine the loss characteristics of the butterfly disk. The best fit regression values for the constants a and b in equation 5 are shown in table 1, along with other parameter values for the performance tests. There was no measurable head loss until the valve closing angle reached about 20°. Therefore, for these tests, the minimum valve angle, θ_{v0}, was set at 22° and the radius R_c was calculated to fully close the valve with a 102 mm (4 in.) cylinder stroke.

Results

Laboratory test results are shown in figure 7 along with predicted response curves for the three tests. The upper curve for each of the laboratory tests is the response obtained as the upstream pressure increased, and the lower curve resulted as the upstream pressure decreased. The difference between the upper and lower levels is the hysteresis due to valve shaft or cylinder friction. The upper curves are flatter than the predicted response. This is partly due to friction, and a small unbalanced hydrodynamic force on the butterfly disk at angles between approximately 25° and 45°, which tends to help close the valve. The hydrodynamic force was found to be small relative to the friction forces and was neglected in the analysis. A desirable flat response curve was obtained if the spring attachment angle θ_{s0} was approximately 20 to 30° larger than the cylinder attachment angle θ_{c0}. No tests were conducted with outlet pressure $P_o > 0$. Increasing P_o would simply increase upstream pressures by an equal amount

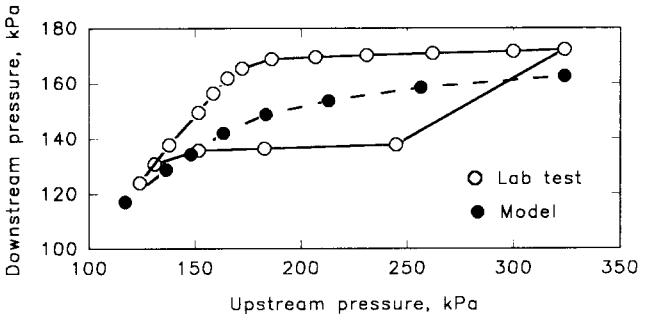

(a) Test 1

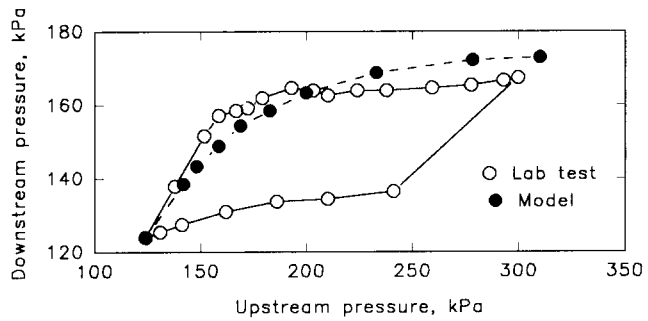

(b) Test 2

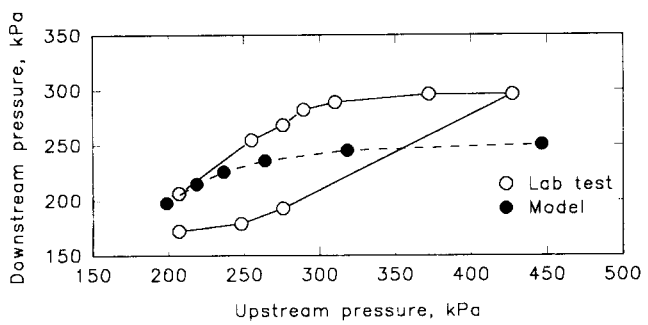

(c) Test 3

Figure 7–Model predicted and laboratory measured response for the three tests in table 1: (a) Test setup with flow meter (right), downstream valve, and pressure gauge, (b) side view of cylinder and lever plate, and (c) top view of cylinder, spring, and lever plate.

and should not change the operating characteristics of the control.

The hysteresis was about 35 kPa (5 psi) for tests 1 and 2, and about 45 kPa (10 psi) for test 3, the higher pressure test. The higher pressure may have caused more friction in the valve and cylinder. It appears that hysteresis in the range of 10 to 20% is associated with this control.

Design and Development Considerations

Friction in the valve shaft and seal must be reduced in order to lower the pressure regulation hysteresis. A commercial butterfly valve with a full shutoff seal would not work well in this application because of the valve seal friction. A nonsealing disk covering 90 to 95% of the pipe area should attain sufficient head loss. A better bearing and seal could be devised to reduce friction, however, the cylinder friction also contributes to the hysteresis. Use of a larger diameter cylinder should reduce the hysteresis because a small change in pressure will yield a correspondingly larger change in the force.

Since the design of the basic control for a specified control pressure P_2 (eqs. 1 to 4) is independent of the pipe size and flow rate, a single cylinder, spring and pivot configuration could handle several pipe sizes and pressure ranges. For example, table 2 lists suggested configurations for a regulator using the parameters as listed for test 2, except that the cylinder and spring attachment radius and the initial spring tension is changed for four different control pressure levels.

The sensitivity and control accuracy is largely determined by the spring adjustment. Using a spring with a low spring constant, or setting the initial tension to a large value, and reducing the radius R_s, results in greater sensitivity, although an optimum balance must be achieved between sensitivity and hysteresis. The internal cylinder spring could be removed, since its force is small compared to the external spring. A larger diameter cylinder may be required if shaft friction increases with larger pipes or higher pressure drops across the butterfly.

The flow control configuration was not tested but it would require using a downstream manually adjusted valve or orifice as shown in figure 2. The regulator would maintain a constant pressure difference across the orifice, and thus a constant flow rate. Pressure hysteresis may limit the flow control applications accuracy since low head losses are normally desired.

The control cylinder and mechanism as designed could be exposed to physical damage and may require a protective enclosure. The regulator could be mounted on a short pipe section with appropriate couplings for various pipe types and diameters, and irrigation system applications. The cost of the control cylinders is about $20 to $40. The cost of building the complete units is estimated at about $100 to $150 depending on pipe size, couplings, etc. The spreadsheet program (Quattro Pro) is available from the authors.

References

Humpherys, A. S. 1986. Energy dissipation in low pressure irrigation pipelines I. Butterfly valves and disks. *Transactions of the ASAE* 29(6):1685-1691.

Table 2. Suggested design parameters for various control pressures (P_2) using the cylinder and spring of test 2, table 1

P_2 kPa (psi)	R_c mm (in.)	R_s mm (in.)	F_{so} N (lb)
69 (10)	90 (3.5)	30 (1.2)	70 (15.7)
138 (20)	90 (3.5)	50 (2.0)	120 (27.0)
276 (40)	60 (2.4)	140 (5.5)	150 (33.7)
413 (60)	40 (1.6)	160 (6.3)	180 (40.5)