Purchased by Agricultural Research Service,
U.S. Department of Agriculture, for official use.

SOIL SCIENCE
Vol. 106, No. 2
Copyright © 1968 by The Williams & Wilkins Co.
Printed in U.S.A.

A HAND-OPERATED UNDISTURBED CORE SAMPLER

CLARENCE W. HAYDEN AND WILLIAM H. HEINEMANN, JR.
United States Department of Agriculture[1]

Received for publication October 2, 1967

Many studies require undisturbed soil cores. Soil conditions vary widely, depending upon site characteristics; some of the more difficult conditions are encountered in such studies as canal seepage studies and dry rangeland. A minimum amount of shattering, compaction, or distortion is desired. In some areas, rocky soil makes sampling from a pit impractical, and mountain terrain restricts the sampling equipment to lightweight, portable devices.

Swanson (5) noted that the Lutz-type sampler (4) caused sample disturbance, usually from the impact of the hammer while taking samples. Since the Swanson-type sampler, the Coile Sampler, (1) and many others employ the same techniques and require a pit to sample deeper soils, the chances of disturbance still exist. Experience indicated that the hammer-type sampler was undesirable for use in our studies and that a sampler that could be used where mountainous terraine prohibited the transportation of motor-driven samplers, such as the Utah Soil Sampling Machine (3), was a necessity.

The Snake River Sampler (fig. 1) consists of five basic parts: an outer spiraled steel casing, an inner split sleeve holder, a split sleeve sample holder (which can be either brass or steel), an inner sleeve lock, and a spring steel cutting tip. The outer steel casing (fig. 2-A) is four inches I.D. with the spiral extending to within ⅛-inch of a removable spring-steel cutting tip. The inside bottom end of the steel casing is bevelled to form a seat for the split sleeve holder (fig. 2-B). The split sleeve holder is a tube 12 and ⅜ inches with a ⅛-inch ledge near the bottom as a seat for the 12-inch split sleeve sample holder (fig. 2-C). The split sleeve holder slides into the spiraled steel casing and is bevelled on the cutting end and machined to receive a spring-steel cutting tip. The cutting tip is placed in position with the two ends slightly overlapping. A close-fitting rubber plug with a metal washer on top and bottom and with a ⅜-inch bolt through the center is then fit into the end of the split sleeve holder. As the nut is tightened, the rubber plug expands and compresses the cutting tip into position. The cutting tip accounts for much of the success of the sampler.

The split sleeve holder and the 3 and ⅛-inch I.D. split sleeve are non-rotating, and receive the sample upon cutting. This operation is possible because of an inner sleeve lock (fig. 3) which fits an L-shaped notch at the top of the split sleeve holder. The small handle of the inner sleeve lock is held stationary by one operator, while the larger rotating handle is turned by the second operator. The outer arms of the lock snap into place under the rotating handle and turn independently of the stationary portion of the lock. This is possible because the shaft of the inner portion extends through the horizontal portion of the arms. This serves as a guide to hold the split sleeve holder in a steady, upright position.

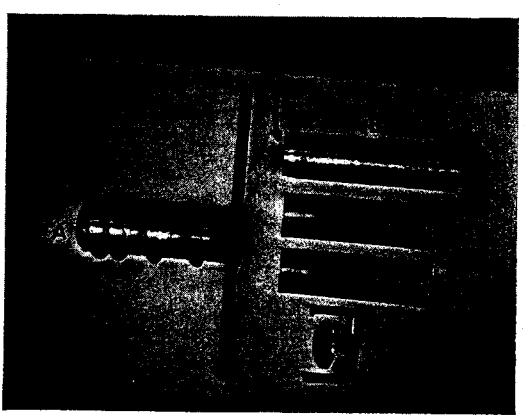

FIG. 1. Disassembled sampler: (a) outer spiral casing; (b) split sleeve holder; (c) cutting tip; (d) split sleeve; (e) inner sleeve lock.

[1] Contribution from the Northwest Branch, Soil and Water Conservation Research Division, Agricultural Research Service, USDA; Idaho Agricultural Experiment Station cooperating. The authors are affiliated with the Snake River Conservation Research Center, Kimberly, Idaho.

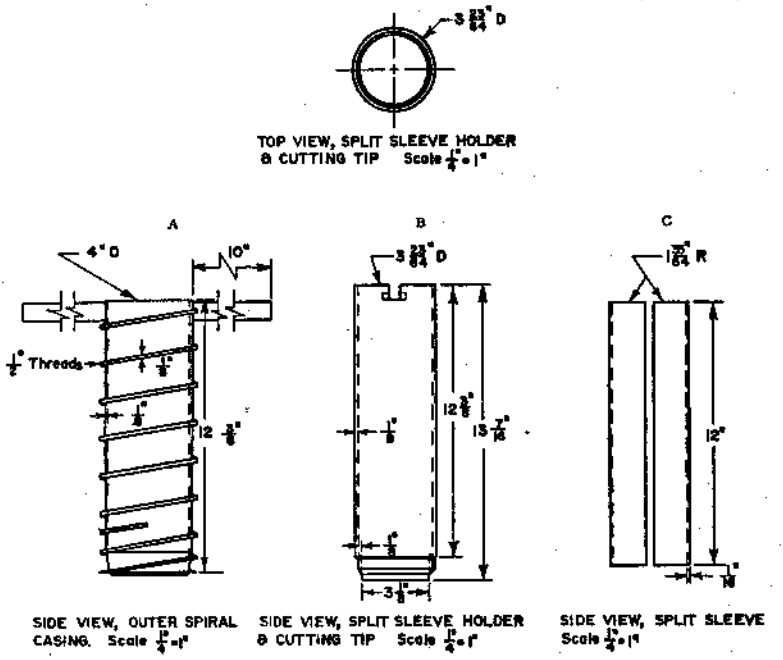

FIG. 2. Top view, split sleeve holder and cutting tip; (a)—side view, outer spiral casing; (b)—side view, split sleeve holder and cutting tip; (c)—side view, split sleeve.

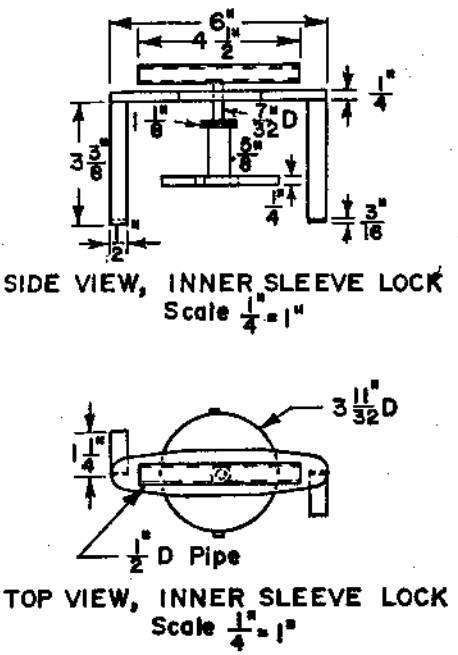

FIG. 3. Side and top views, inner sleeve lock.

FIG. 4. Sample taken in heavy clay.

FIG. 5. Sampler in operation.

The sampler was field tested in a study of the hydraulic conductivity of canal sediment. In this study, many samples of the top ½-inch layer of soil were desired. This layer is very fragile and difficult to preserve. In all, 16 samples were taken consecutively, in the same split sleeve without apparent cracking or visible disturbance.

Forty 9-inch samples were taken in the sides and bottom of the canal and, in all cases, the depth of the hole and length of the sample were found to be identical. In one case, an earthworm hole was split in half for a distance of three inches without disturbing the remaining half.

To determine the all-around efficiency of the sampler in several basic soil types, samples were also taken of a Vaught clay loam, a Gooding sand, and a Portneuf silt loam. The dark gray, sticky, plastic Vaught clay loam is shown in fig. 4. The very fine textured sandy soil tends to disintegrate upon handling. These soils were sampled with complete success and observations were made as to compaction, disturbance and recovery of samples. Data taken with the Snake River Sampler were compared with data obtained with the Uhland Sampler. Comparisons were favorable, and bulk densities taken with the Snake River Sampler varied only .02 per cent. Samples were wrapped in Handiwrap (Dow Chemical Company, Midland, Michigan)[3] to prevent loss of moisture; then a second wrapping of newspaper was applied for packing. The samples were then placed in a 4 ⅛-inch diameter by 8-inch ½ gallon ice cream container. The 9-inch samples were field trimmed to approximately 6 and ½ inches. Thus the containers were ideal for transportation and storage. For large samples, two containers can be taped together. The time required for sampling and preparation of each sample for transportation ranged from 3 to 7 minutes.

Sampling the sandy soil required special handling procedures. Several samples were destroyed in transferring the core from the split tube sleeve to the storage containers. This problem could possibly be overcome by using a solid sample holder sleeve instead of a split sleeve, and transporting the sample in this sleeve without disturbance. This would be necessary only for very loose, dry material.

The sampler, as described, was designed for taking undisturbed cores up to nine inches long. The sampler is compact with a total

[3] Trade names and company names are included for the benefit of the reader and do not imply any endorsement or preferential treatment of the product listed by the U. S. Department of Agriculture.

weight of 191 pounds and is capable of taking a sample with a volume of 80.28 cubic inches. The complete cost of manufacturing a sampler, including labor, is $200.00. This cost considers construction of one's own split sleeve. If the proper size split sleeve were available at the time of construction, the cost could have been reduced another $40.00.

The advantages of this sampler are that samples can be taken from many positions, ranging from level ground to sides of hills. The apparatus can be loaded into a car for easy transportation, and two men can carry it to any sampling site with ease. For deeper samples, the manual turning handles can be removed and the instrument could be mounted on a mechanized soil sampler such as described by Jensen (2).

REFERENCES

(1) Coile, T. S. 1936 Soil samplers. Soil Sci. 42: 139–142.

(2) Jensen, M. E., Sletten, W. H., and Ochs, R. L. 1960 Mechanized soil sampler with offset drive. Trans. of the ASAE 3(1): 22–24.

(3) Kelly, Omer J., Hardman, James A., and Jennings, Davis S. 1948 A soil-sampling machine for obtaining two, three, and four-inch diameter cores of undisturbed soil to a depth of six feet. Soil Sci. Soc. Am. Proc. 12: 85–87.

(4) Lutz, J. F. 1947 Apparatus for collecting undisturbed soil samples. Soil Sci. 64: 399–401.

(5) Swanson, C. L. W. 1950 A portable soil core sampler and penetrometer. Agron. J. 42: 447–451.

Since this paper was submitted for publication, a few modifications have been made to the described sampler. These relate to mounting the samples for greater stability and a slight change in the tip of the spiraled flukes for easier penetration.

Also, a design for taking deeper samples has been formulated. If you are interested in building your own sampler, feel free to contact me in regard to these changes.